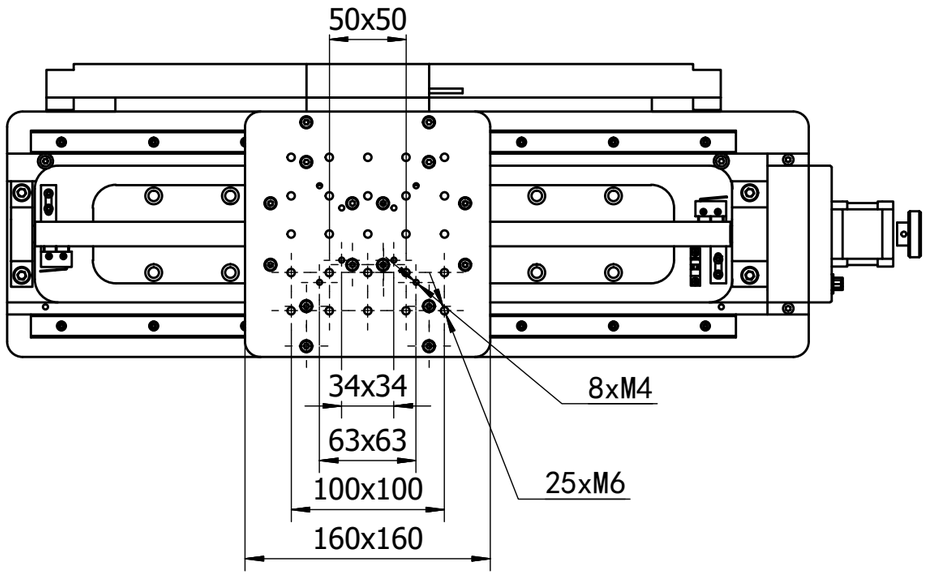

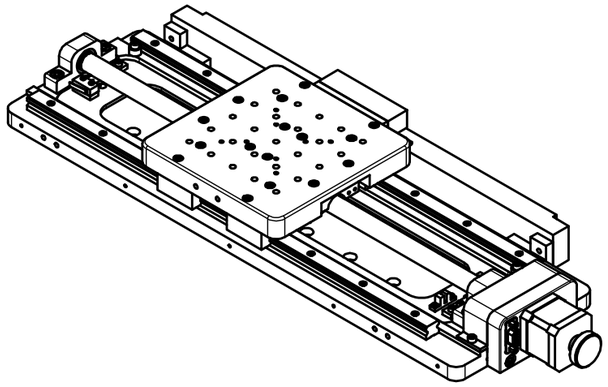

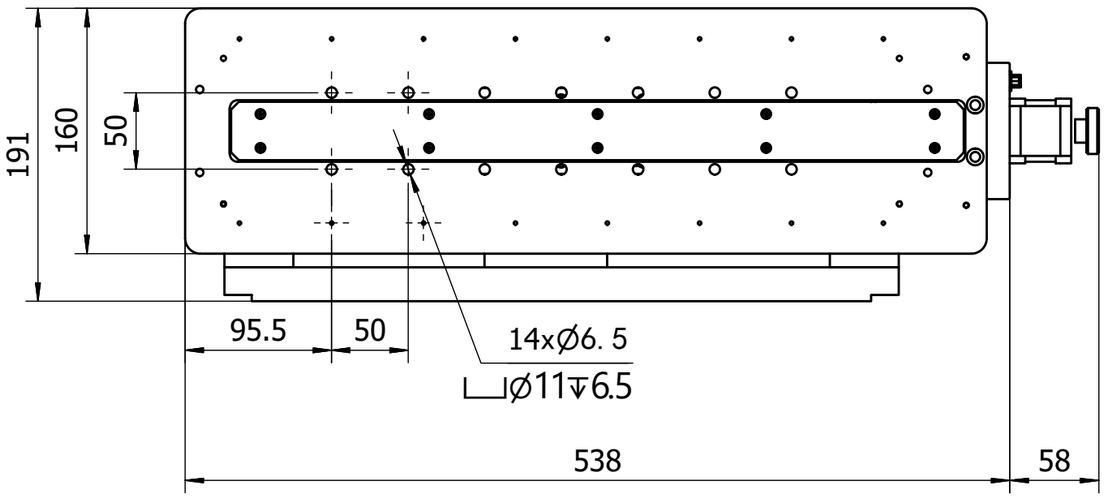

OPTICS FOCUS

MOX-07-300-G