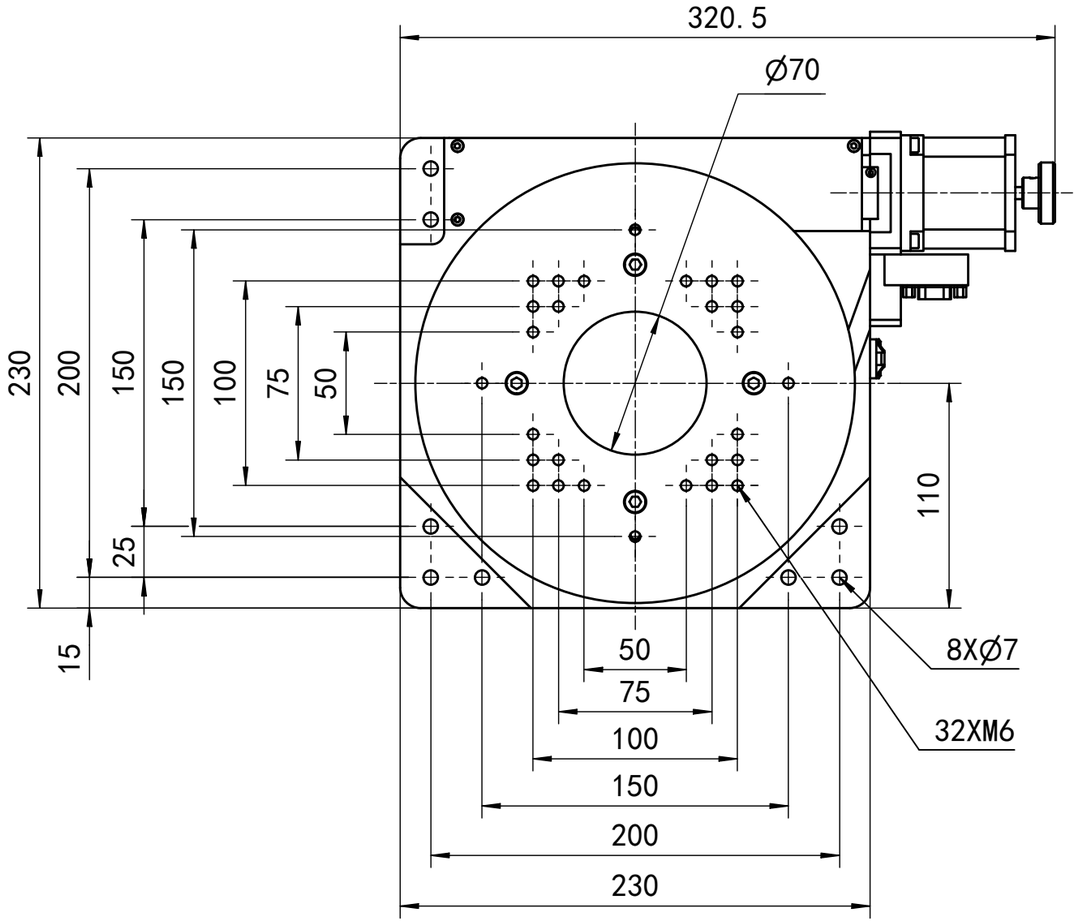

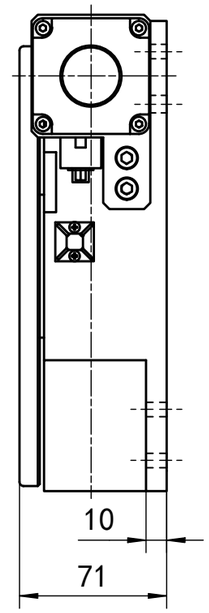

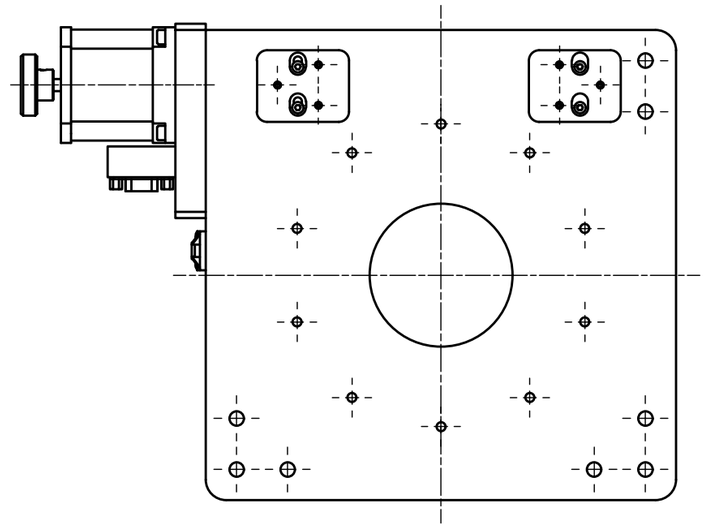

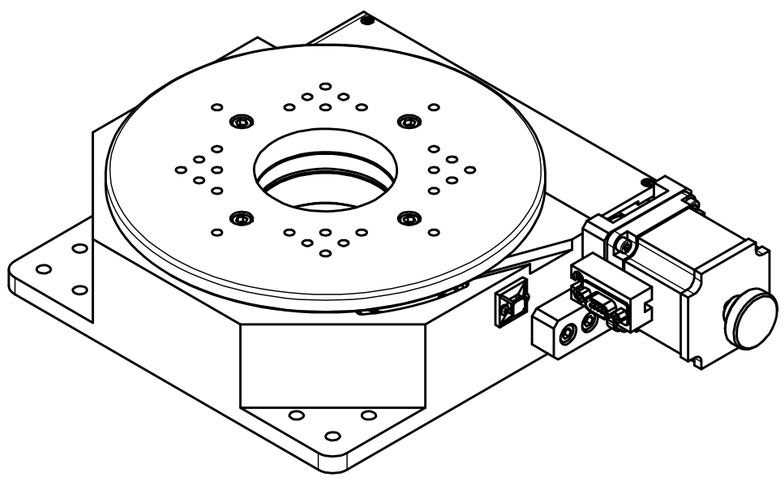

OPTICS FOCUS

MOR-215-70-G