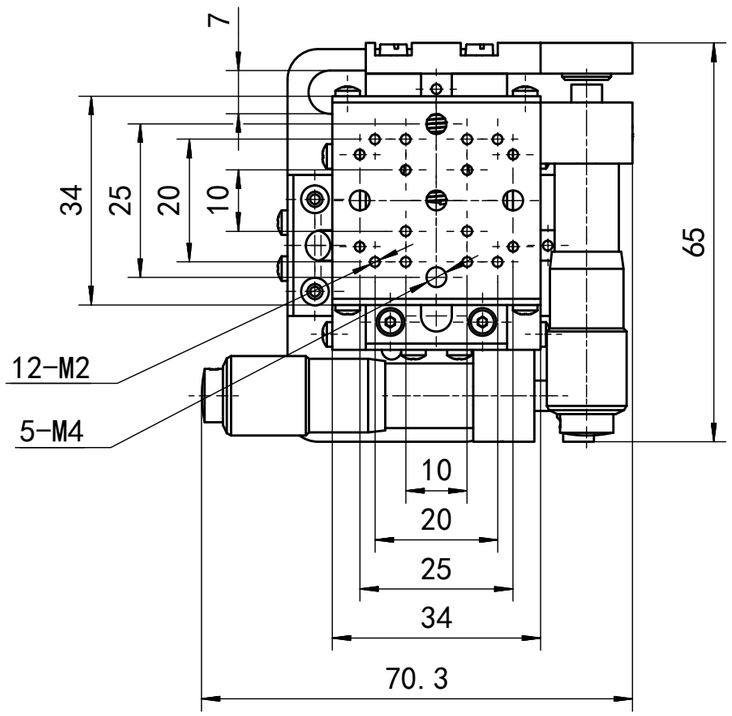

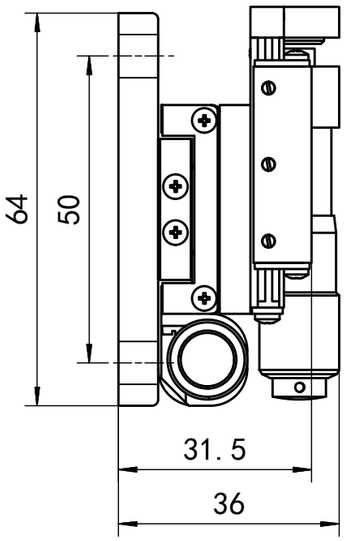

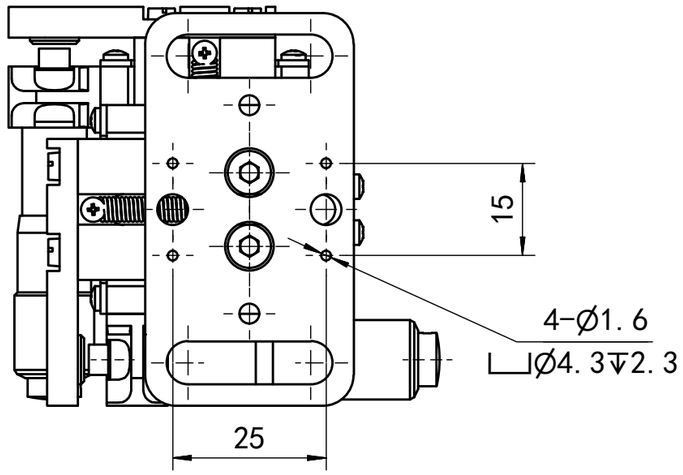

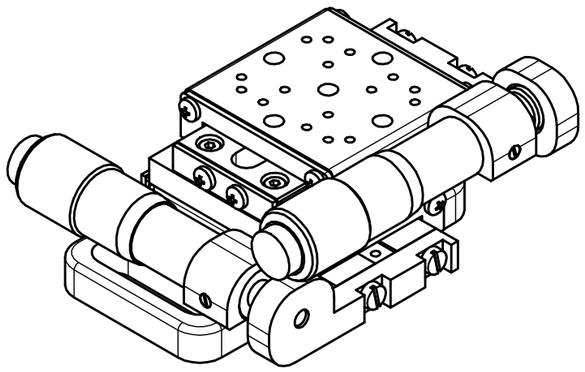

OPTICS FOCUS

MAXY-B34R-13