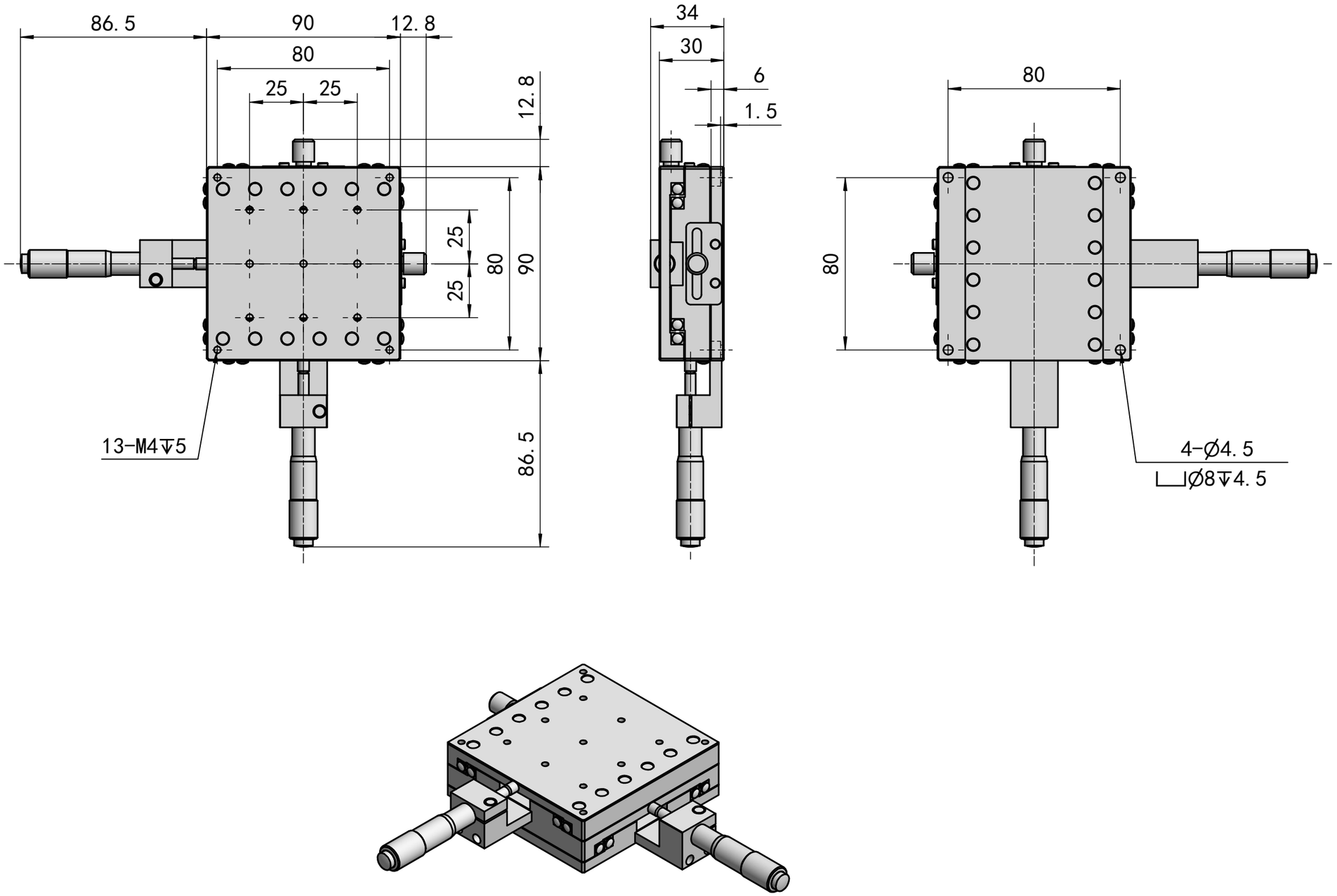

OPTICS FOCUS

MAXY-90C-25S